CRBFV 11528 AT UU

Luoyang JCB Bearing Technology Company Limited has full copyright for this drawing, we reserve the right to investigate and ascertain any misappropriation immorally

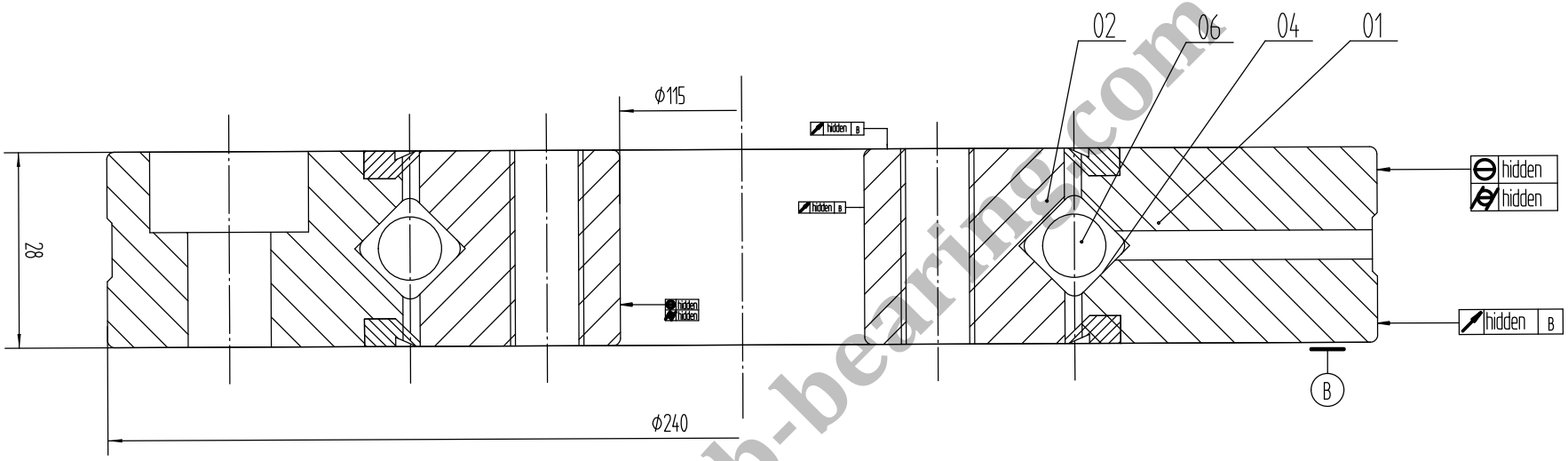

Remark:

1. Luoyang JCB Bearing Technology Co., Ltd is a technical Inc,specialize in designing and manufacturing crossed roller bearing, we can design and manufactur all kinds of crossed roller bearing according to client's equirement, demension range cover from 20mm to 6500mm, precision grade is from P0 to P4.
2. This drawing is only a reference, if you need formal drawing please contact with us sales@jcb-bearing.com, the official drawing will be submitted according to your request.

Contact information
Company Address : No. 285, Fenghua Road, Hi-tech Development Zone, Luoyang Area Of China (Henan) Pilot Free Trade Zone. Postal code : 471000
Phone : 86-379-68611678 Fax : 86-379-68611679
E-mail: sales@jcb-bearing.com Reserved E-mail: jcb-bearing@hotmail.com
Website: www.jcb-bearing.com
www.cross-roller-bearing.com

Email:sales@jcb-bearing.com

roller cross arrangement

Part No.	Name	qty	Material	weight (kg)
06	Spacer			
04	Roller		steel GCr15-GB/T18254	
02	Inner ring		steel GCr15-GB/T18254	
01	outer semi ring		steel GCr15-GB/T18254	

CROSS ROLLER BEARING

CRBFV 11528 AT UU

Weight (kg) 6.81

Total 4 page | First page

Luoyang JCB Bearing Technology Co, Ltd